AQUABRASS

3008

3/4" shut-off valves

FEATURES

Solid brass construction
3/4" NPT female connection (outlet and inlet)
Ceramic cartridge

Flow rate: depends on supply valve capacity

WARRANTY

Residential: Limited lifetime warranty to original purchaser
Commercial: Two years warranty
(Complete warranty available at www.aquabrass.com/warranty)

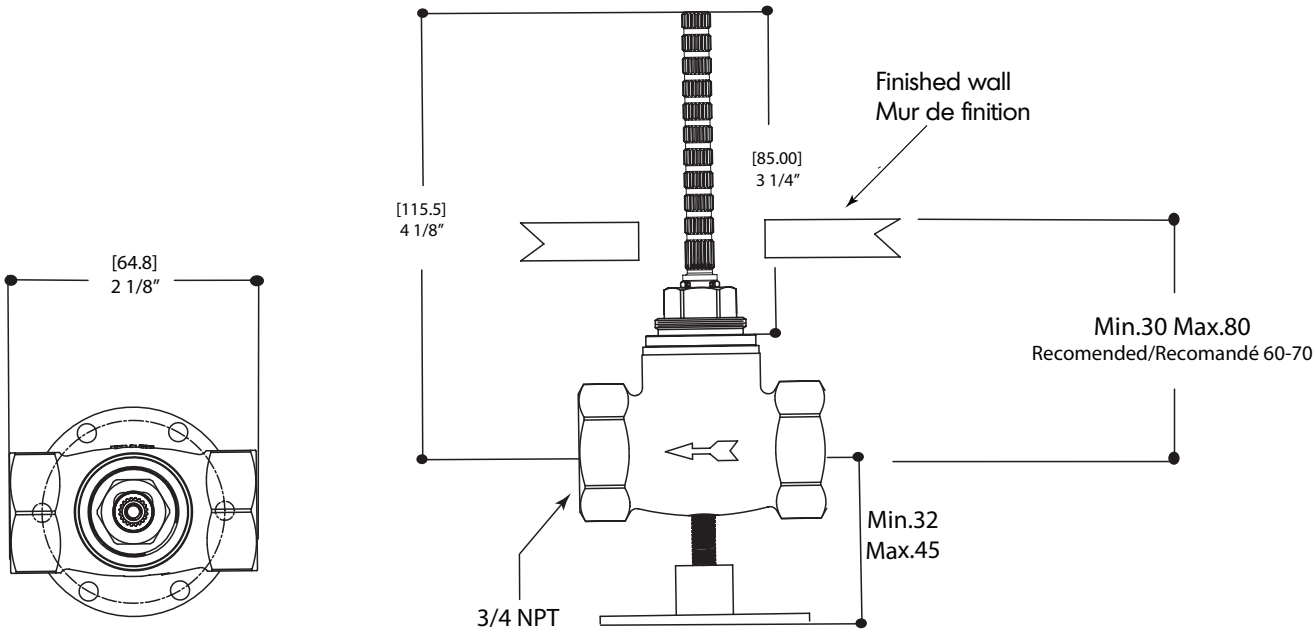

AQUABRASS

3008

3/4" shut-off valves

EXPLOSION PARTS

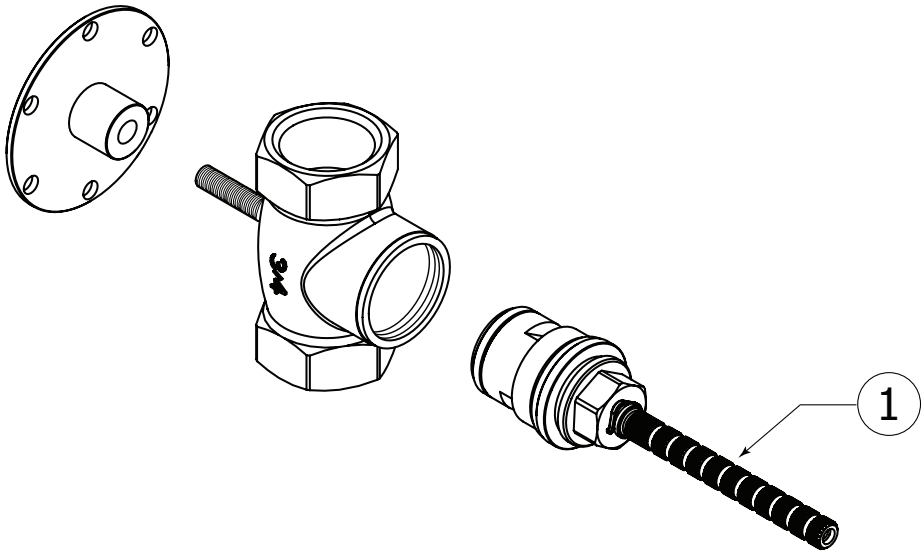

Item	Code	English	Français
1	ABCA82320	Shut-off valve cartridge	Cartouche de la valve d'arrêt

Products and specifications shown are subject to change without notice. Please contact our technical support at tech@aquabrass.com for any further queries, replacement parts requests etc.